Installation Job Aid (English) for Avaya Ethernet Routing Switch 5600 Series (NN47200-304, ver 01.01)

Before you begin

Ensure the area where you install and use the Avaya ERS 5600 Series switch meets the following environmental requirements:

- Ambient temperature between 32° and 106° F (0° and 50° C)
- Relative humidity between 10% and 90% noncondensing
- No nearby heat sources such as hot air vents or direct sunlight
- No nearby sources of severe electromagnetic noise
- No excessive dust
- Adequate power source within six feet; one circuit required for each power supply (see table, AC and DC power specifications)
- At least 2 inches (5.08 cm) on each side of the switch unit for ventilation
- Adequate space at the front and rear of the switch for access to cables

If you are installing a single Avaya Ethernet Routing Switch on a table or shelf, ensure the surface can support at least 21 to 33 pounds (9.5 to 15 kilograms).

Installing the switch on a table or shelf

You can install a single Avaya Ethernet Routing Switch on any flat surface that can safely support the weight of the switch and attached cables (21 to 33 pounds or 9.5 to 15 kilograms).

The following figures provide instructions for installing the switch on a table or shelf.

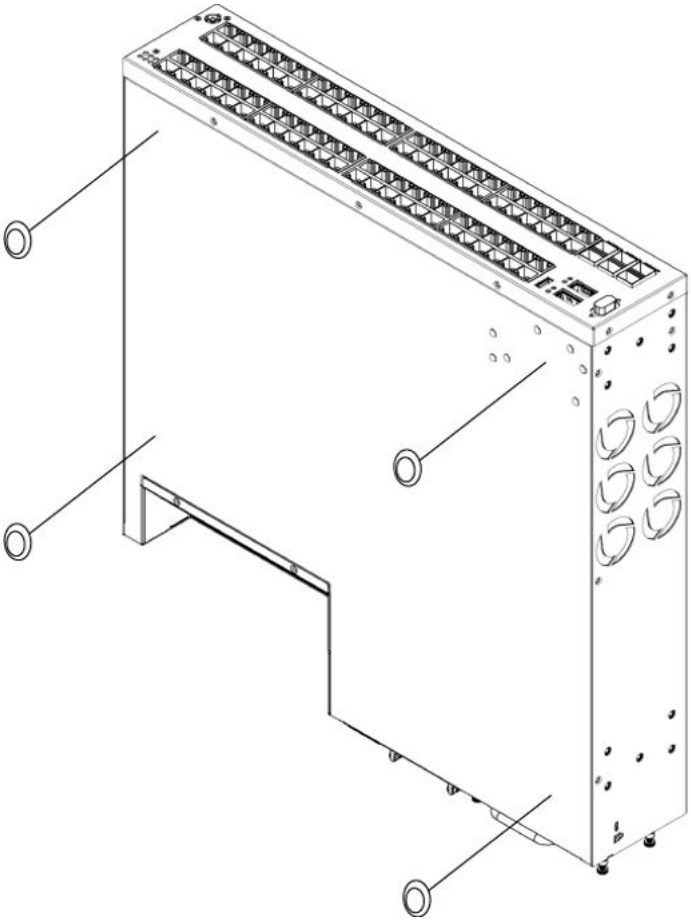

Attach the rubber feet at the marked locations.

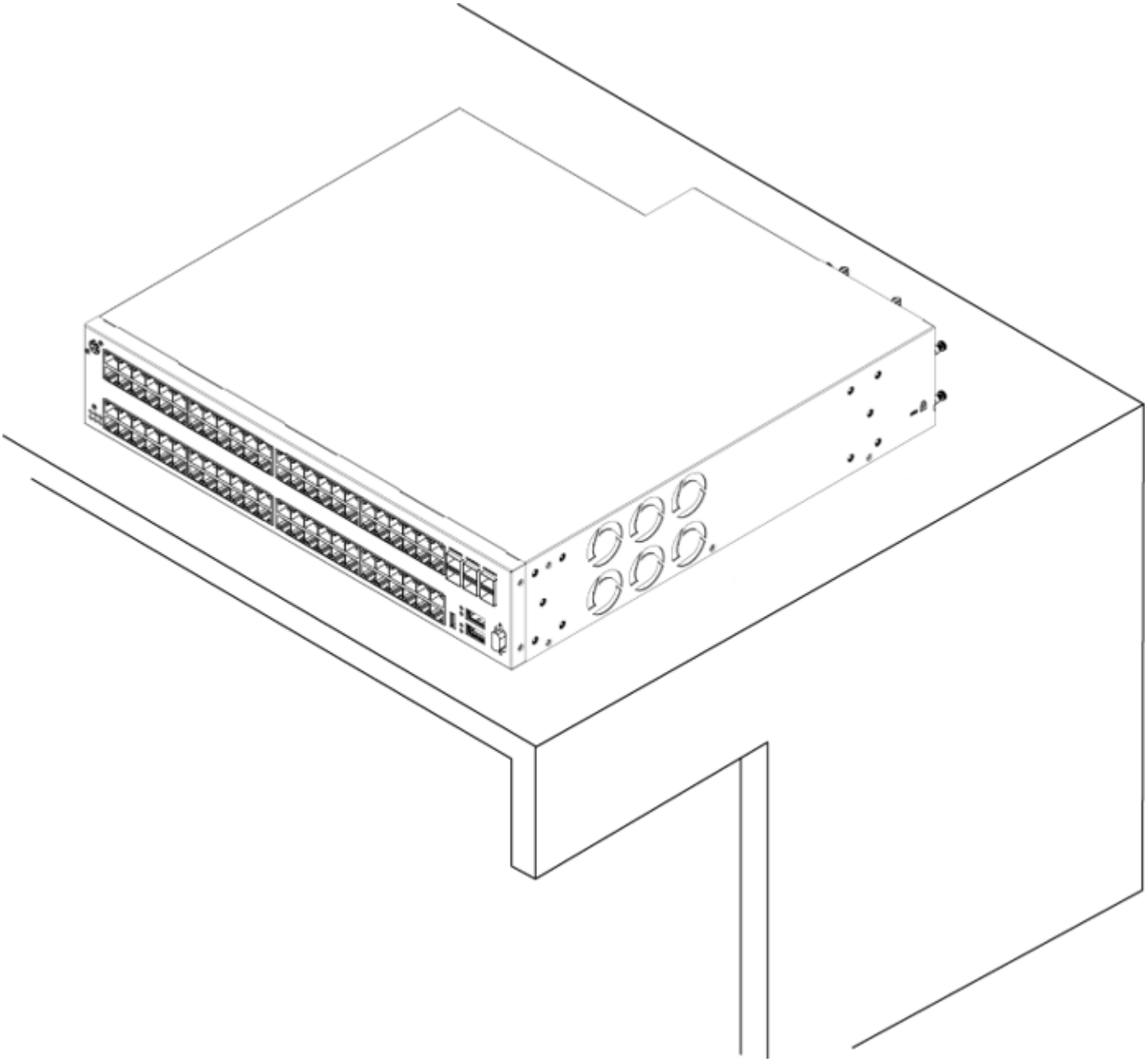

Set the switch on a table or shelf.

Note:

Allow at least 2 inches (5.1 cm) on each side for proper ventilation and at least 5 inches (12.7 cm) at the back for power cord clearance.

Installing the switch in an equipment rack

Required tool: Phillips screwdriver for attaching brackets to the switch.

Rack requirements:

- A space of 2.8 inches (71.1 centimeters) for each switch in an EIA or IEC standard 19 inch (48.2 centimeter) equipment rack and TIA 23 inch (58.5 centimeter) equipment rack.
- Appropriate space to accommodate unit height:
  - ERS 5650 models require one rack unit (1.75 inches, 44.45 millimeters)
  - ERS 5632 models require 1.5 rack units (2.625 inches, 66.68 millimeters)
  - ERS 5698 models require 2 rack units (3.5 inches, 88.90 millimeters)
- The rack must be bolted to the floor, and braced if necessary.
- The rack must be grounded to the same grounding electrode used by the power service in the area. The ground path must be permanent and must not exceed 1 ohm of resistance from the rack to the grounding electrode.

The following figures illustrate installing the switch in a rack.

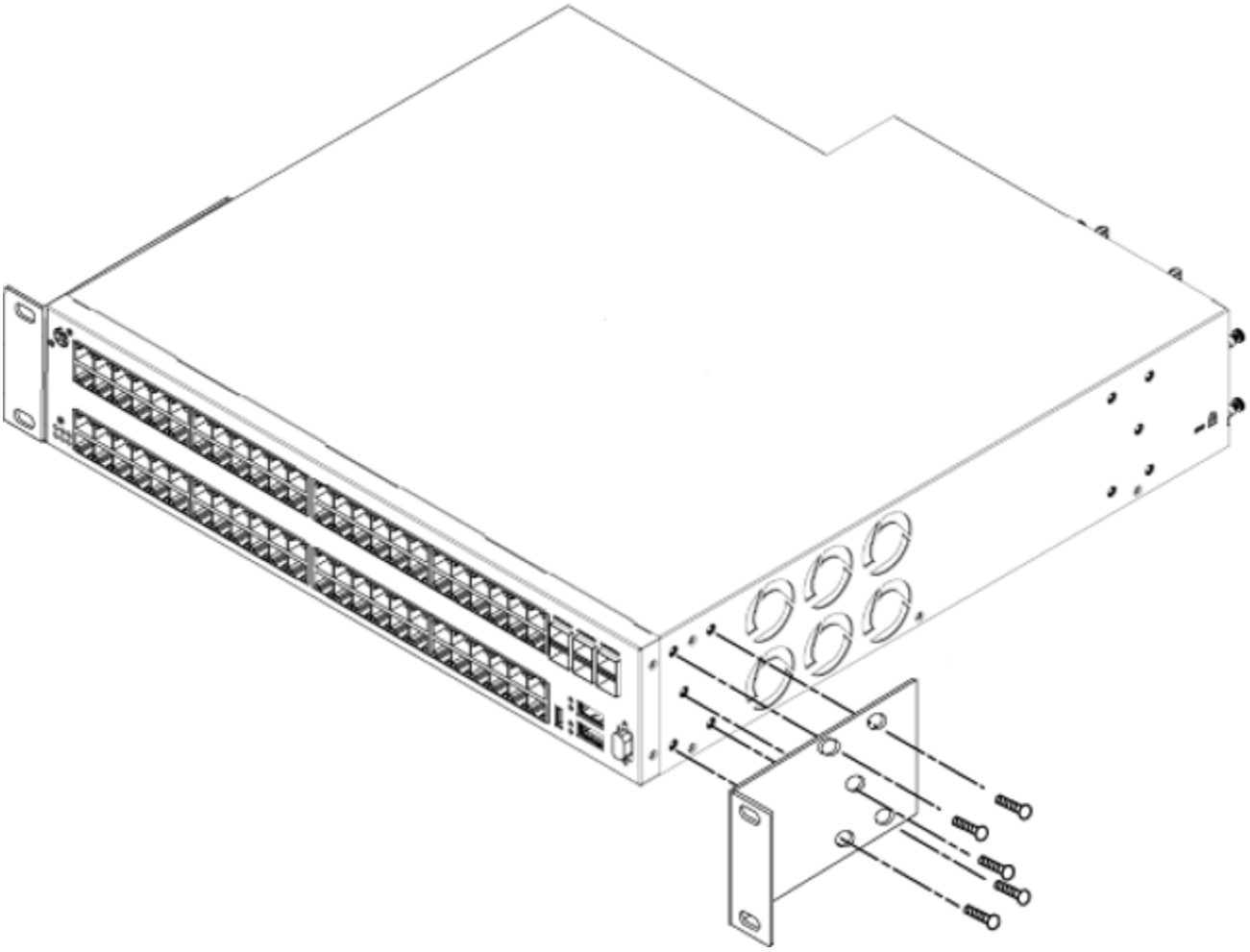

Figure 1: Front-mounted rack bracket installation

Attach a bracket to each side of the switch.

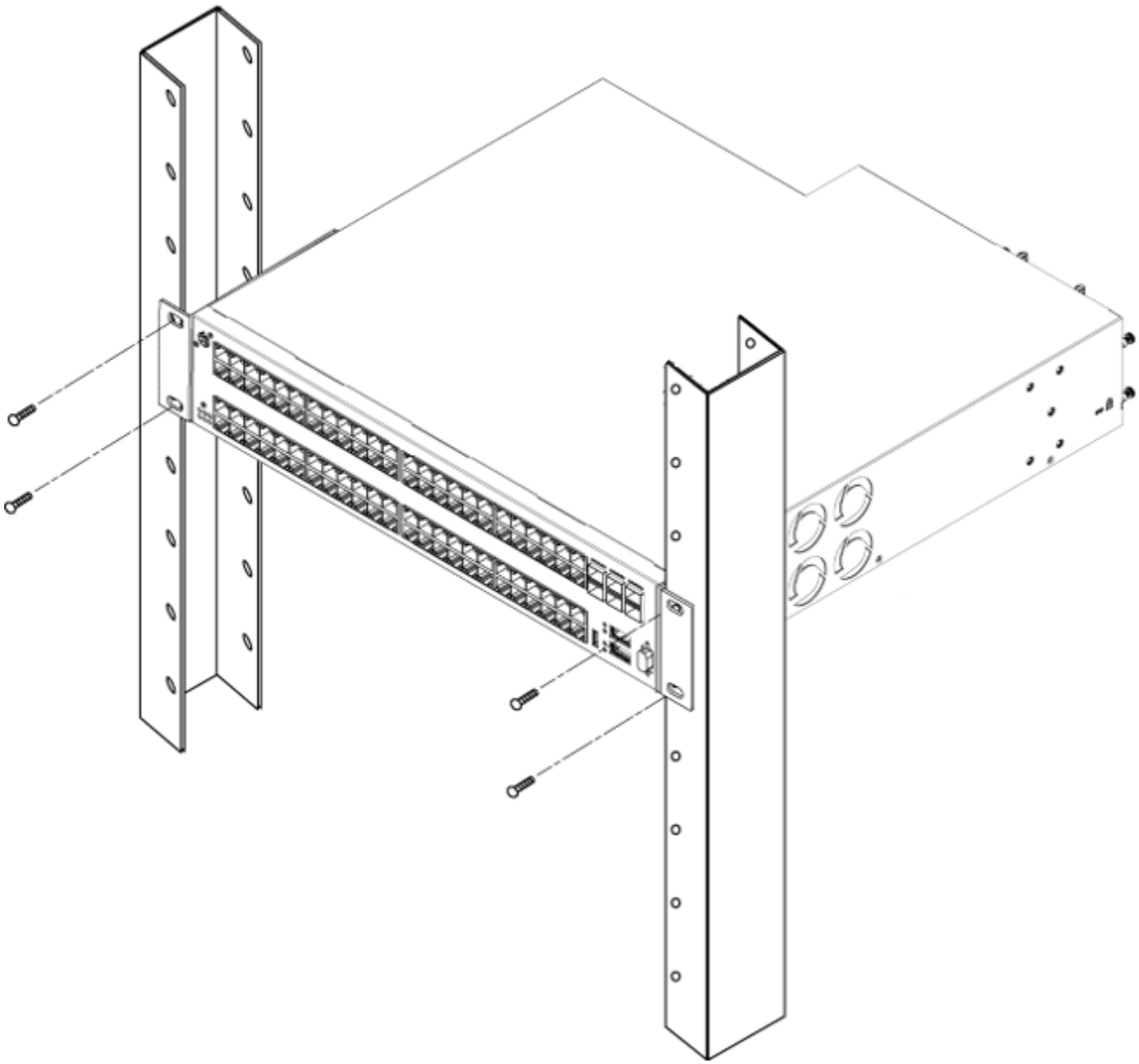

Figure 2: Front-mounted rack installation

Slide the switch into the rack. Insert and tighten the rack mount screws.

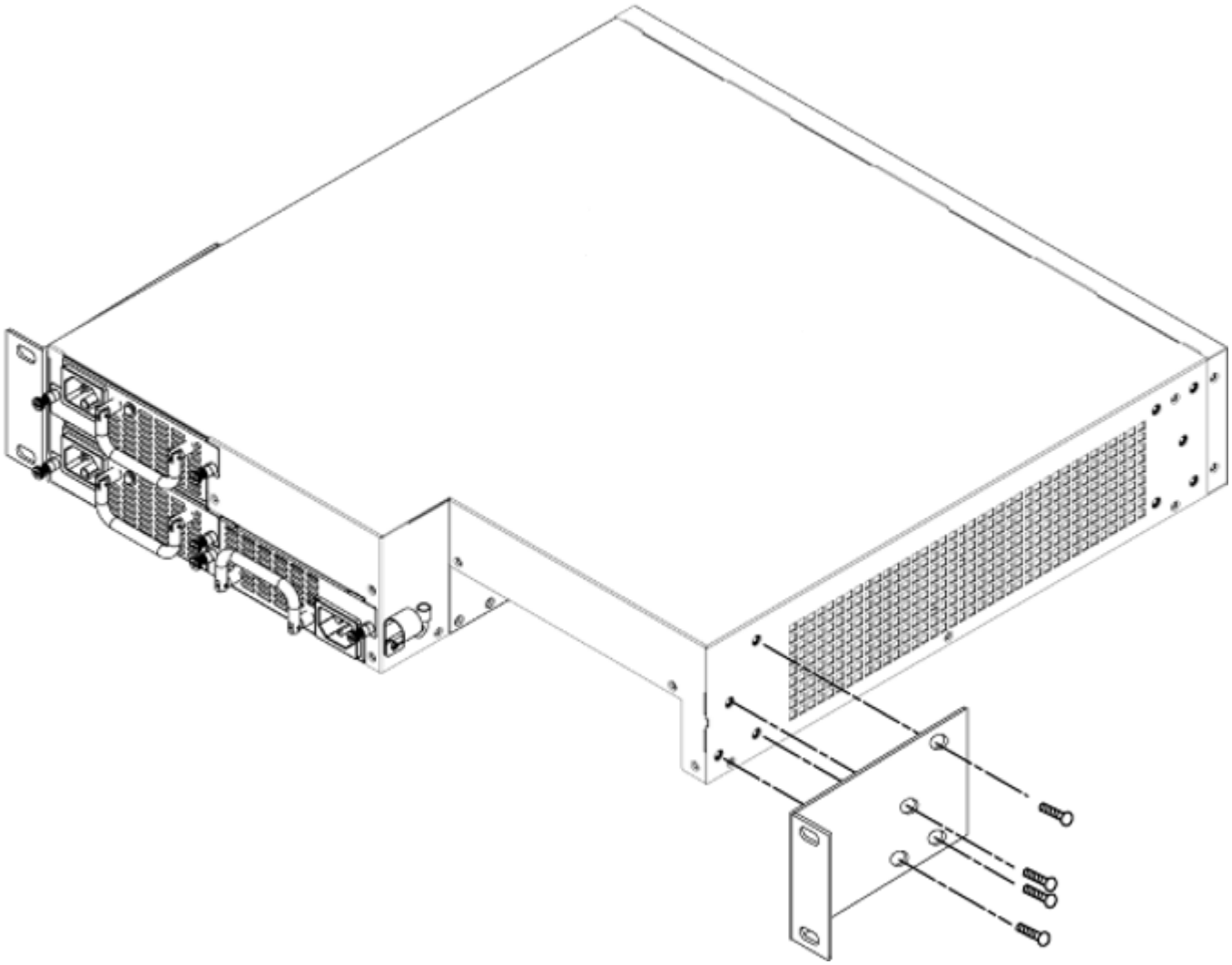

Figure 3: Rear-mounted rack bracket installation

Attach a bracket to each side of the switch.

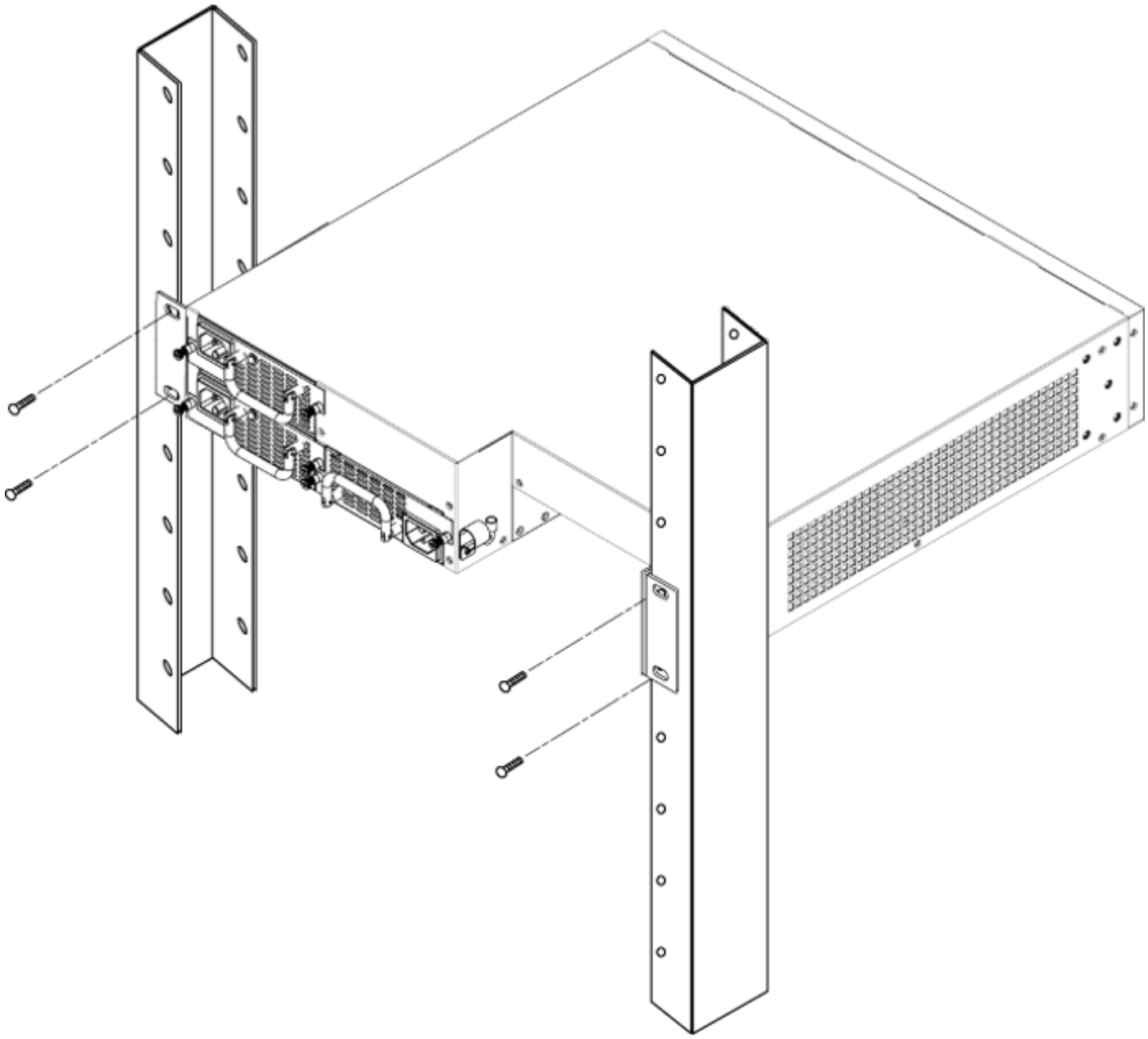

Figure 4: Rear-mounted rack installation

Slide the switch into the rack. Insert and tighten the rack mount screws.

AC and DC power specifications

The following table describes the AC and DC power specifications for the Ethernet Routing Switch 5600 Series.

Model	Input current Amps maximum per power supply			Power consumption	Thermal rating	Power supply used	Power over Ethernet (PoE)
	100–120 VAC	48 VDC	200–240 VAC	Watts maximum	BTU/h maximum	Watts AC/DC, DC/DC	Power per port (Watts)
ERS 5632FD	1.8		0.9	190	650	300	n/a
ERS 5632FD DC		4.2		190	650	300	n/a
ERS 5650TD	1.2		0.6	132	450	300	n/a
ERS 5650TD DC		3.0	0.6	132	450	300	n/a
ERS 5650TD-PWR	5.5		2.75	218	745	600	8.0
ERS 5650TD-PWR DC	10.5		5.25	290	990	1000	15.4
ERS 5650 TD-PWR (2 power supplies)	5.3 *		2.65 *	290	990	600 *	15.4
ERS 5650 TD-PWR DC		21		290	990	1000	15.4
ERS 5698TFD	2.0		1.0	215	735	300	n/a
ERS 5698TFD DC		4.5		215	735	300	n/a
ERS 5698TFD-PWR	10.5		5.25	400	1365	1000	8
ERS 5698TFD-PWR (2 power supplies)	9.5 *		4.75 *	545	1850	1000 *	15.4

Model	Input current Amps maximum per power supply			Power consumption	Thermal rating	Power supply used	Power over Ethernet (PoE)
	100–120 VAC	48 VDC	200–240 VAC	Watts maximum	BTU/h maximum	Watts AC/DC, DC/DC	Power per port (Watts)
ERS 5698TFD-PWR DC		26		400	1365	1000	8
ERS 5698TFD-PWR DC (2 power supplies)		21 *		545	1850	1000 *	15.4
* per power supply							

Connecting AC power

Required cable: AC power cord that meets the requirements of your local electrical code. Refer to the following table for plug specifications.

Table 1: International power cord specifications

Country and plug description	Specifications	Typical plug
Continental Europe • CEE7 standard VII male plug • Harmonized cord (HAR marking on the outside of the cord jacket to comply with the CENELEC Harmonized Document HD-21)	220 or 230 VAC 50 Hz Single phase	 228FA
U.S./Canada/Japan • NEMA5-15P male plug • UL-recognized (UL stamped on cord jacket) • CSA-certified (CSA label secured to the cord)	100 or 120 VAC 50-60 Hz Single phase	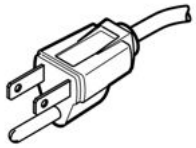 227FA

Country and plug description	Specifications	Typical plug
United Kingdom • BS1363 male plug with fuse • Harmonized cord	240 VAC 50 Hz Single phase	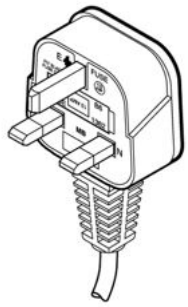 229FA
Australia AS3112-1981 male plug	240 VAC 50 Hz Single phase	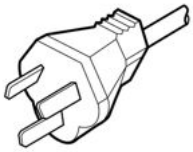 230FA

The Ethernet Routing Switch 5600 Series does not have a power switch. When you connect the AC power cord to a suitable AC power outlet, the switch powers up immediately.

Connect the AC power cord to the back of the switch, and then connect the cord to a power outlet. Ensure that you use the correct power cord for the switch and power supply.

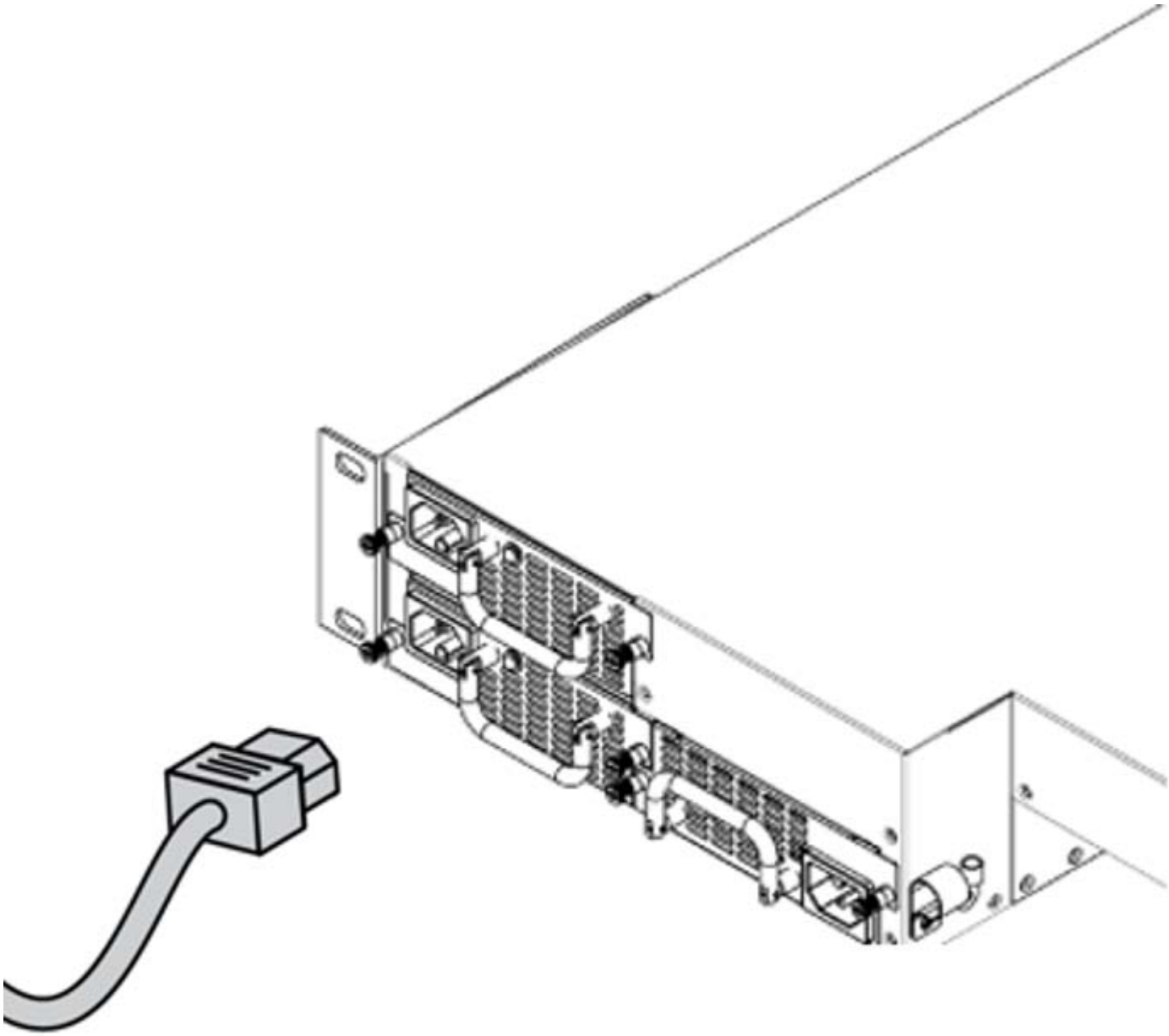

Figure 5: Connecting the AC power cord to the Ethernet Routing Switch 5600 Series

Safety messages

Warning:

Installation must be performed by qualified service personnel only. Read and follow all warning notices and instructions marked on the product or included in the documentation.

Voltage:

This equipment relies on the building's installation for overcurrent protection. Ensure that a fuse or circuit breaker no larger than 120 VAC, 15 A U.S. (240 VAC, 16 A International) is used on the phase conductors.

Caution:

This device is a Class A product. In a domestic environment, this device can cause radio interference, in which case the user may be required to take appropriate measures.

Caution:

When mounting this device in a rack, do not stack units directly on top of one another in the rack. Each unit must be secured to the rack with appropriate mounting brackets. Mounting brackets are not designed to support multiple units.

Voltage:

Use only power cords that have a grounding path. Without a proper ground, a person who touches the switch is in danger of receiving an electrical shock. Lack of a grounding path to the switch can result in excessive emissions.

Warning:

Disconnecting the power cord is the only way to turn off power to this device. Always connect the power cord in a location that can be reached quickly and safely in case of an emergency.

Warning:

Fiber optic equipment can emit laser or infrared light that can injure your eyes. Never look into an optical fiber or connector port. Always assume that fiber optic cables are connected to a light source.

Caution:

Risk of explosion if battery is replaced by an incorrect type. Dispose of used batteries according to the instructions.

Copyright © 2013 Avaya Inc - All Rights Reserved.